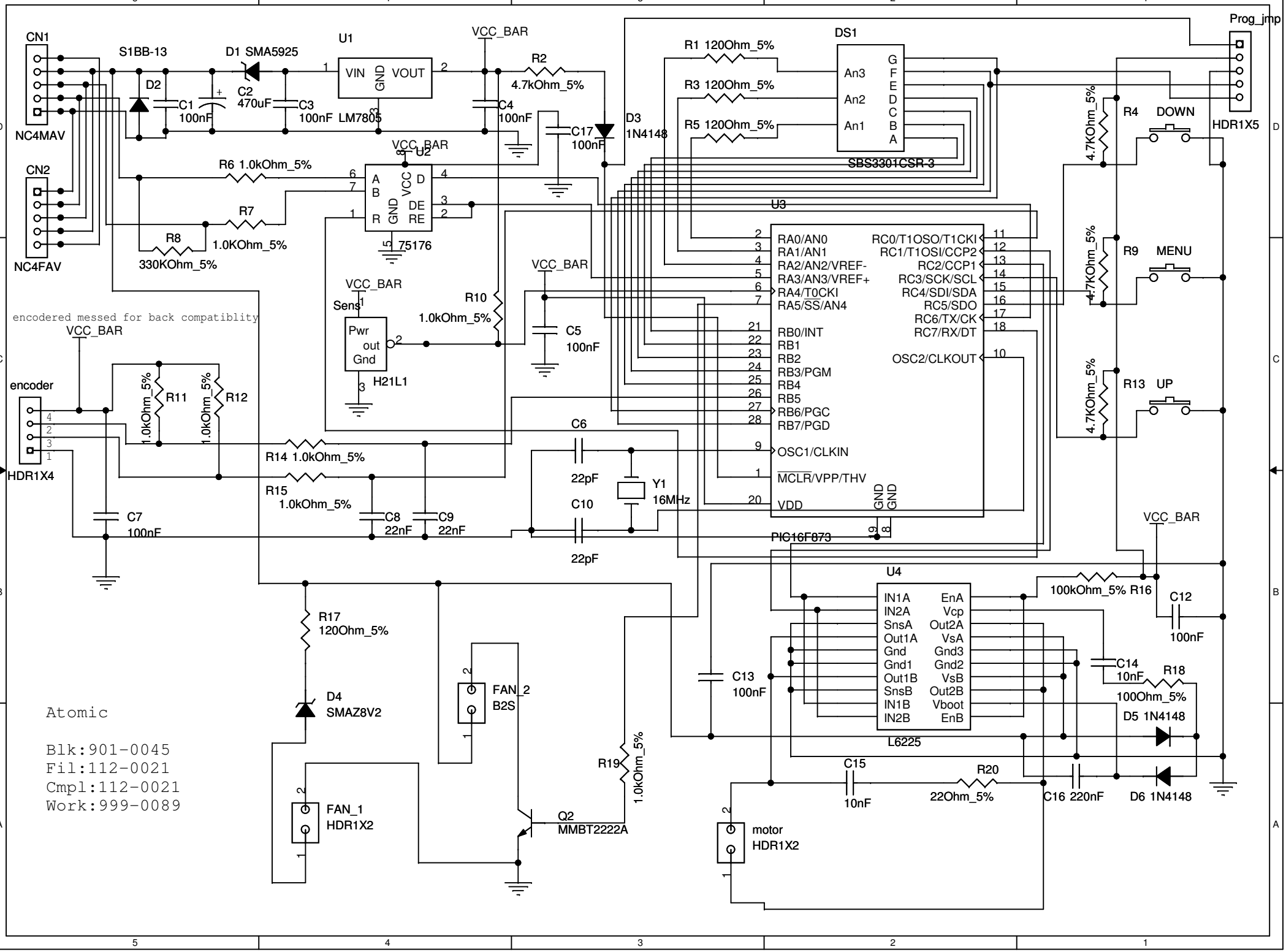
CN1
NC4MAV
CN2
NC4FAV
S1BB-13
D1 SMA5925
D2
C1 100nF
C2 470uF
C3 100nF
U1
VIN
GND
VOUT
LM7805
VCC_BAR
R2 4.7kOhm_5%
C4 100nF
C17 100nF
D3 1N4148
R6 1.0kOhm_5%
R7 1.0KOhm_5%
R8 330KOhm_5%
U2
A
B
R
GND
VCC
D
DE
RE
75176
encodered messed for back compatiblity
encoder
HDR1X4
R11 1.0kOhm_5%
R12 1.0kOhm_5%
R14 1.0kOhm_5%
R15 1.0kOhm_5%
C7 100nF
C8 22nF
C9 22nF
Sens
Pwr
out
Gnd
H21L1
R10 1.0kOhm_5%
C5 100nF
C6 22pF
C10 22pF
Y1 16MHz
R1 120Ohm_5%
R3 120Ohm_5%
R5 120Ohm_5%
DS1
An3
An2
An1
G
F
E
D
C
B
A
SBS3301CSR-3
U3
RA0/AN0
RA1/AN1
RA2/AN2/VREF-
RA3/AN3/VREF+
RA4/T0CKI
RA5/SS/AN4
RB0/INT
RB1
RB2
RB3/PGM
RB4
RB5
RB6/PGC
RB7/PGD
OSC1/CLKIN
MCLR/VPP/THV
VDD
RC0/T1OSO/T1CKI
RC1/T1OSI/CCP2
RC2/CCP1
RC3/SCK/SCL
RC4/SDI/SDA
RC5/SDO
RC6/TX/CK
RC7/RX/DT
OSC2/CLKOUT
GND
PIC16F873
Prog_jmp
HDR1X5
R4 4.7KOhm_5%
DOWN
R9 4.7KOhm_5%
MENU
R13 4.7KOhm_5%
UP
U4
IN1A
IN2A
SnsA
Out1A
Gnd
Gnd1
Out1B
SnsB
IN1B
IN2B
EnA
Vcp
Out2A
VsA
Gnd3
Gnd2
VsB
Out2B
Vboot
EnB
L6225
100kOhm_5% R16
C12 100nF
C13 100nF
C14 10nF
R18 100Ohm_5%
D5 1N4148
C15 10nF
R20 22Ohm_5%
C16 220nF
D6 1N4148
R17 120Ohm_5%
D4 SMAZ8V2
FAN_2 B2S
FAN_1 HDR1X2
R19 1.0kOhm_5%
Q2 MMBT2222A
motor HDR1X2
Atomic
Blk:901-0045
Fil:112-0021
Cmpl:112-0021
Work:999-0089